Circus unARTiq – Technical Plan - CurtainCall:

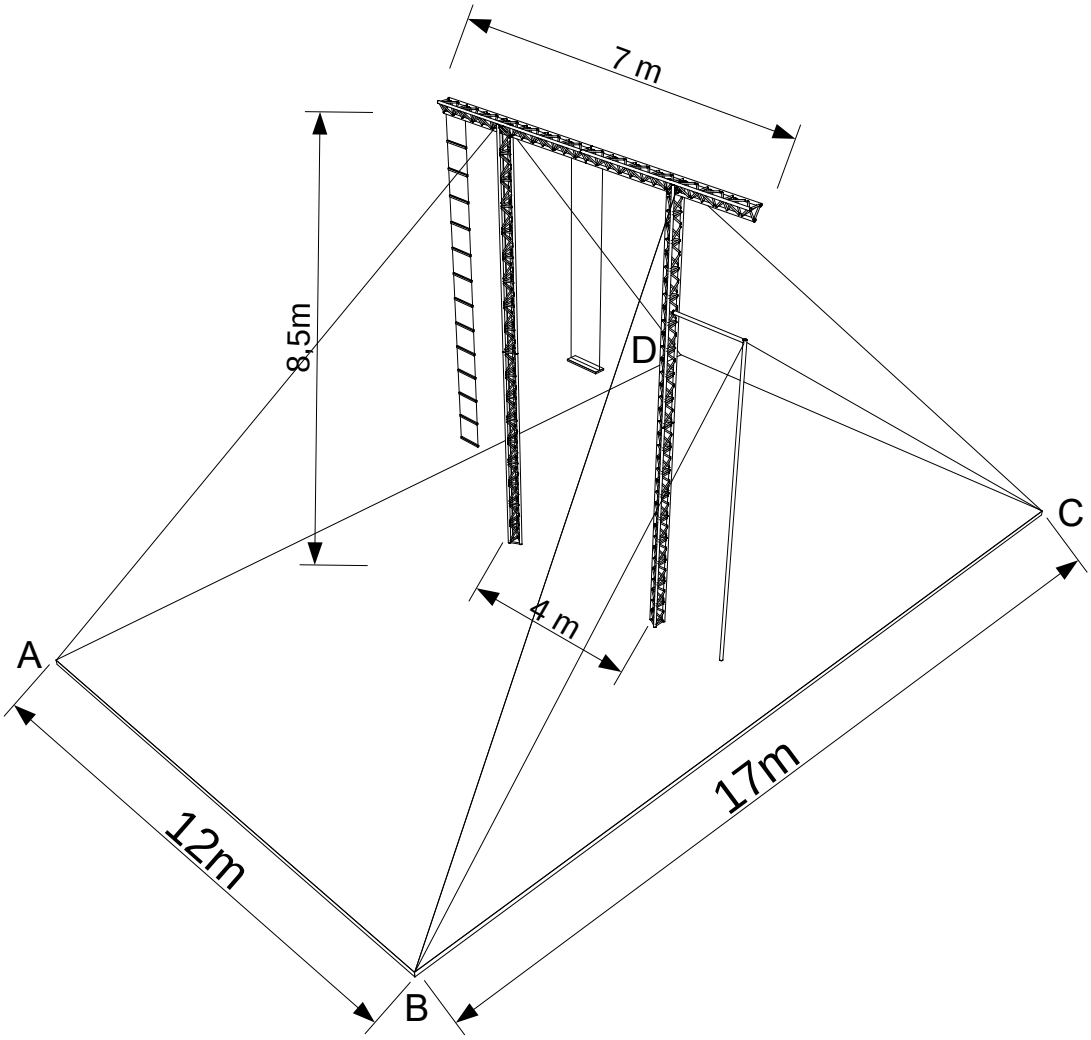

Technical requirements

- Space: even and firm ground on an area of min. 12 x 17 m

- Clearance over the total area : min. 11 m

- A, B, C and D: possibility to put ground nails. (Alternative: weights of 1000 kg i.e. concrete blocks or water tanks have to be provided.)

Contact: Andreas Bartl – info@circus-unartiq.de - +49 (0)175 4039282